2.6558 6mm Blow Back Airsoft Gas Pistol

WALTHER® PPK/S & PPK/S KIT

BLOW BACK | METAL SLIDE | SPIN UP ADJUSTABLE

PARTS LIST

● SLIDE

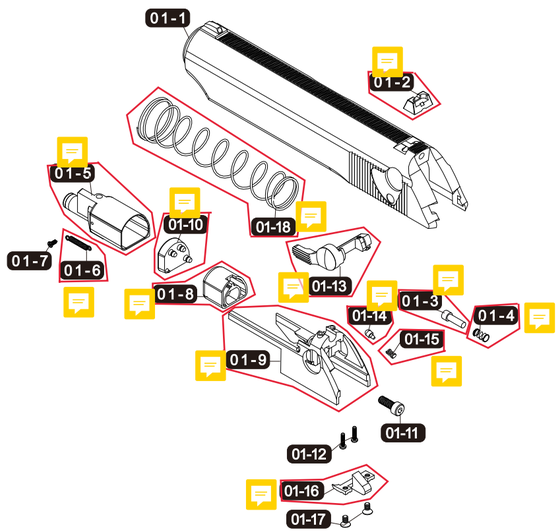

● GRIP

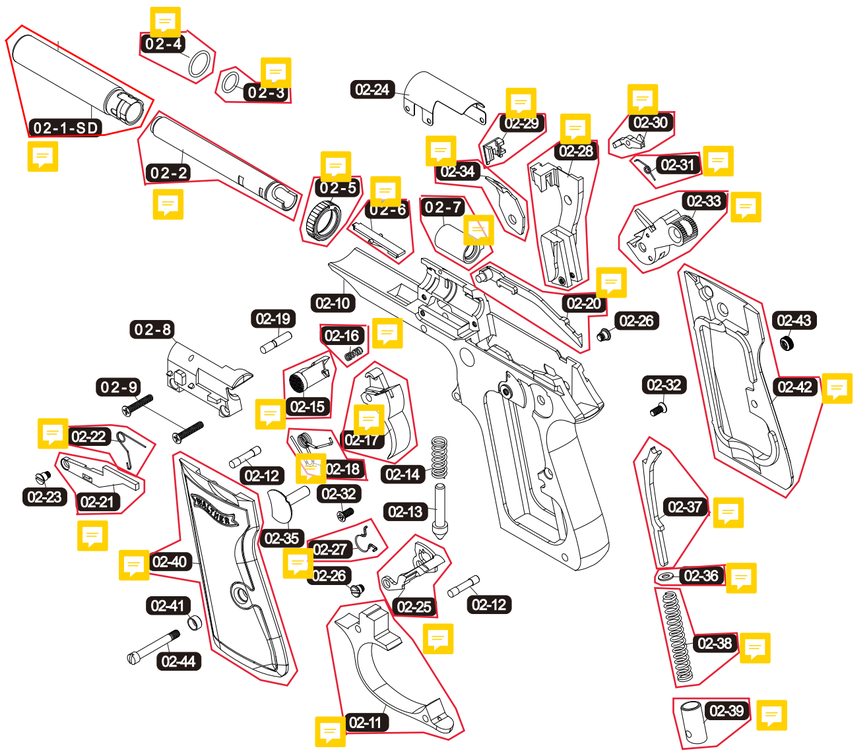

● MAGAZINE

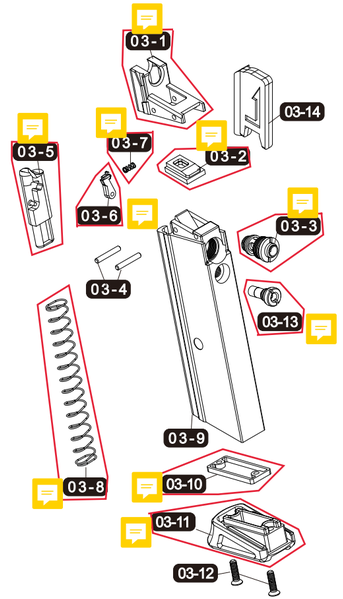

● SUPPRESSOR

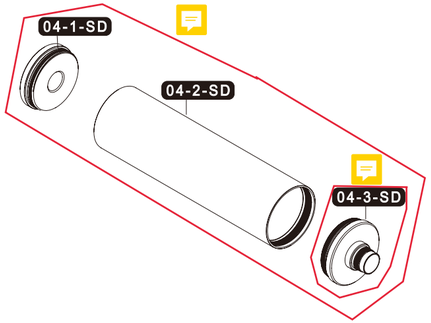

2024.02.06